DATA SHEET

EL 500 EC 10 | 139780

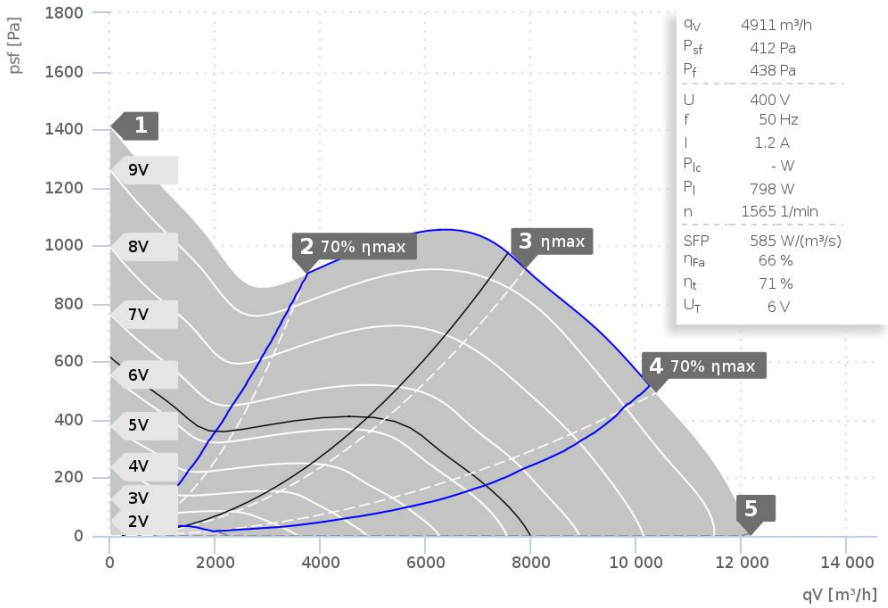

— **ErP compliant range**

- Diagonal impeller with stator
- Casing of aluminium
- EC motor
- Necessary EC-Controller included in delivery

Operating Point		1	2	3	4	5
Current I	A	3,6	2,9	4,2	4,2	3,9
Power consumption P_1	W	2468	1962	2849	2855	2640
RPM n	1/min	2379	2423	2355	2384	2400
SPL inlet L_{WA5}	dB(A)	99	94	96	93	96
SPL outlet L_{WA6}	dB(A)	102	98	95	98	98
SPL casing break out L_{WA2}	dB(A)	93	89	88	88	93

Sound power (L_W) dB(A)		Medium Frequency Band								
		Σ	**63**	**125**	**250**	**500**	**1k**	**2k**	**4k**	**8k**
Inlet	L_{WA5}	80	45	63	70	72	74	73	70	59
Outlet	L_{WA6}	85	41	70	73	80	80	76	71	62
Casing	L_{WA2}	74	49	55	66	69	69	64	61	56

EL 500 EC 10 | 139780	
Voltage U_N	400 V 3~
Current I_{max}	4,4 A
Ambient Temperature t_A	55 °C
Medium temperatures t_M	55 °C
Speed Control	0-10V
Motor Protection	TEC
Isolation Class	F
Weight	22,2 kg

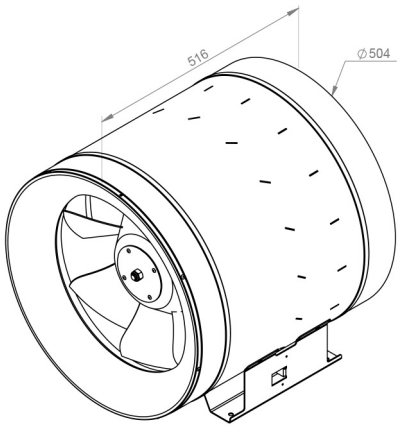

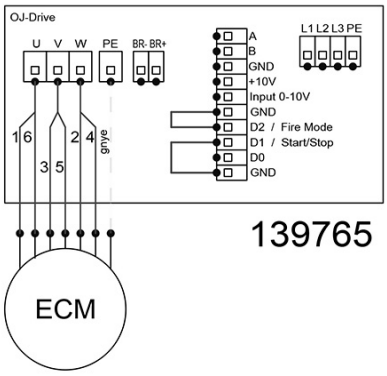

139765

Print 30.08.2018